KSF AERO

A Division of Kern Steel Fabrication

The Leaders in Industrial Work Platforms

Cage Code #31AY6

About Us

Kern Steel Fabrication, Inc. (KSF) founded in 1959 is based in Bakersfield, California. After many years in Steel construction, 25 years ago KSF entered the custom aircraft Ground Support Equipment (GSE) business. Our emphasis is on the custom design and manufacture of all types of GSE. This includes full coverage Dock systems floor mounted or suspended, fixed or mechanized Maintenance Stands, overhead Fall Protection systems and Tooling.

- Work force ranging from 60-100 shop personnel (depending on workload)
- All of our welders are AWS D1.1 certified
- ISO 9001:2008 Certified
- AISC Standard for Steel Building Structures & Sophisticated Paint Coating Endorsement (SSPC SP-3 equivalent)
- Engineering design team on staff
- 13 acre facility
- Over 40,000 square feet of shop fabrication space under bridge cranes
- More than 50,000 additional square feet of fabrication space under roof
- Our mild climate allows us to work outdoors almost all year round
- Capacity of between 40 to 80 tons of structural steel output per day
- State of the art abrasive blasting and coatings application facility

KSF AERO

Manufacturing

KSF has facilities that are more than well suited for the manufacture of Ground Support Equipment. Within our 17-acre Bakersfield, California facility, there are over 90,000 square feet of manufacturing space under our roof. KSF's Bakersfield manufacturing facility is equipped with state-of-the-art Steel and Aluminum metal processing equipment such as Laser Tube & Plate cutting, a 50-foot-long abrasive blasting facility and a 120-foot-long Paint and Blasting Booth.

All these capabilities enables us to maintain total control of the quality of our products and produce the best GSE available. Further enhancing our manufacturing capabilities are our wholly owned subsidiary companies NuSteel Fabrication, Inc. in Childersburg, Alabama with 140,000 square feet of manufacturing space on 40-acres and KSF Mexico in Tijuana, Mexico.

Core Products

Aircraft Maintenance Platforms

KSF Aero offers a wide variety of Aircraft Maintenance Platforms. Our experience and ability to tackle challenging projects is what separates us from the pack.

Industrial Work Platforms

KSF Aero has designed and built industrial work platforms to service many different industries ranging from aerospace to marine applications.

Portable Access Platforms

KSF Aero has developed many different Portable Access Platforms for a wide swath of industries. Our combined experience and ingenuity keeps our customers coming back.

Engineering

Our staff of engineers have over 100 years of combined experience; specific to work platforms, fixture design, machine design and structural steel design.

KSF Engineers use the latest software including Solidworks, Tekla, RISA, CATIA, AutoCAD, XSTEEL, STRUCAD and Pro-E. Our engineers can take you from the 3-D concept model to final assembly quickly and efficiently.

KSF engineers also can see where potential problems may lie and correct them. Our engineers are detail oriented and committed to excellence throughout the whole project.

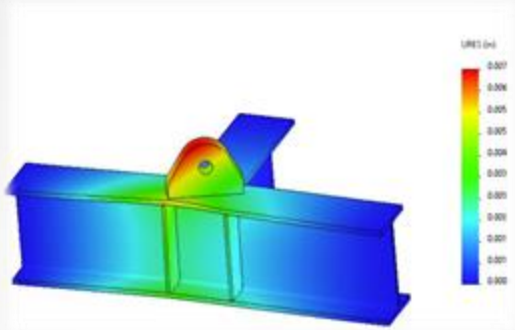

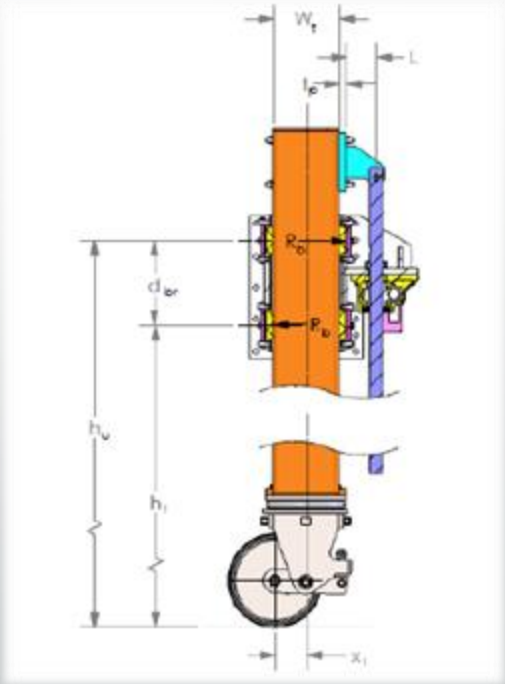

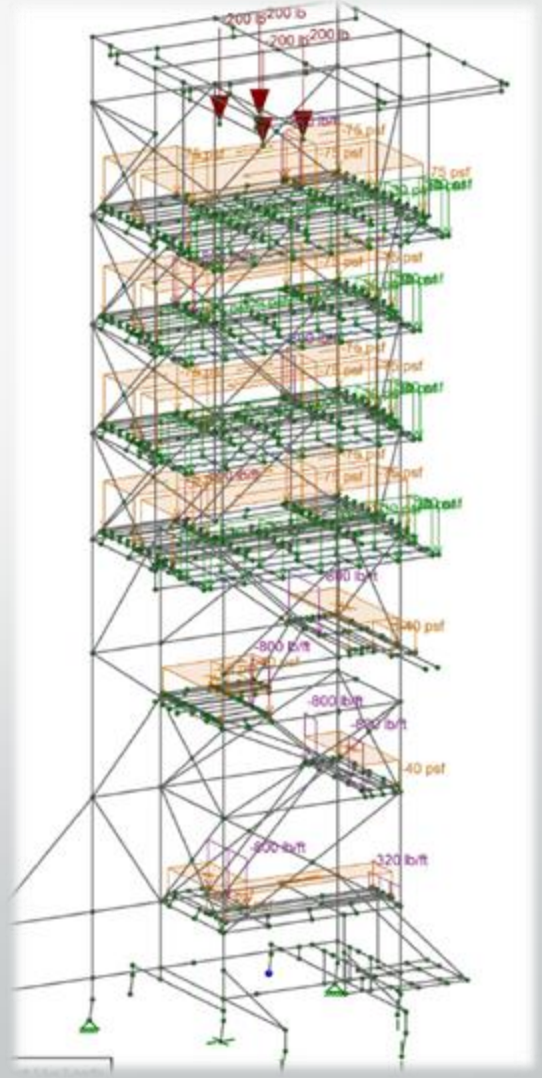

KSF AERO

Mechanized Structures

One thing that separates KSF from the pack is our ability to develop customized solutions to complex problems. Many of our projects involve what we call "Mechanized Structures".

Mechanized Structures are structures that have moving components such as platforms, fall protection structures, tools, etc. KSF has designed mechanized structures that are electric, hydraulic, air and PLC controlled. KSF Engineers have the experience and know how to develop a solution to any problem you face.

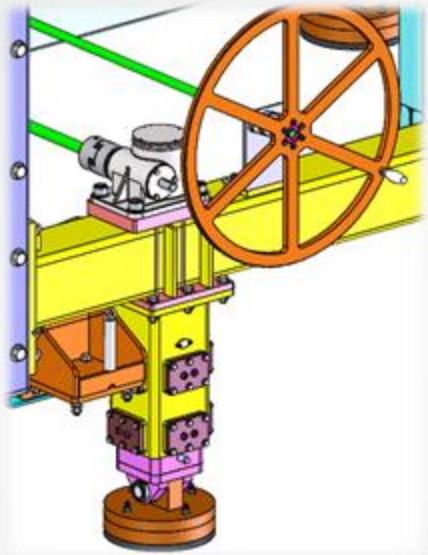

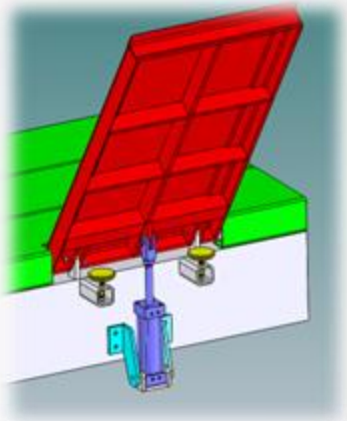

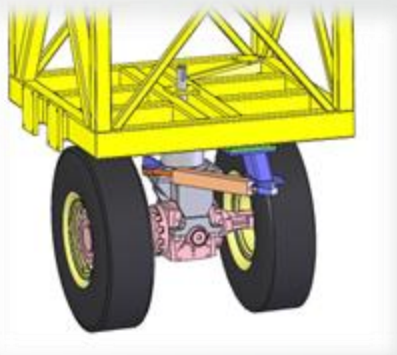

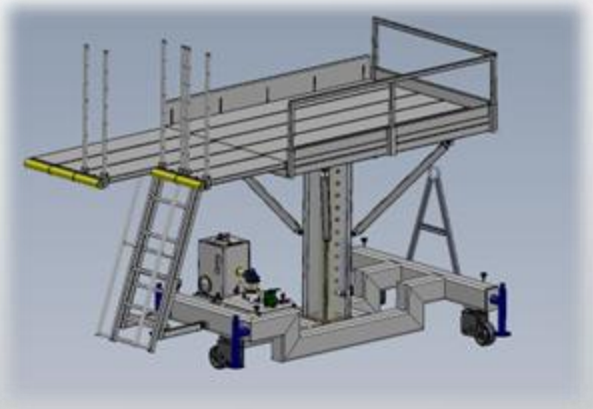

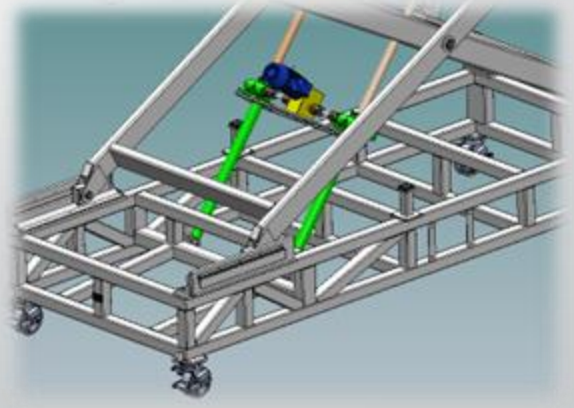

KSF AERO

Showcase Projects

KSF AERO

American Airlines B737/A320 Tail Dock

The American Airlines Combo Tail Dock was a unique challenge in that the Dock had to accommodate two different aircraft in the jacked and non-jacked configurations. To accomplish this the structure allowed for 78" of vertical adjustment via four PLC controlled synchronized jacks.

A separate forward vertically adjustable platform allowed the Dock to accommodate different rear entry door heights while maintaining a safe working height for horizontal stabilizer.

Many features include locking roller sliders, utility stations, LED lighting, fall protection tie-off anchors, steerable caster among many other innovative features.

C-5 Empennage Stand

Kern Steel was selected for this project through the U.S. Air Force's rigorous "Full Four Color" source selection process. This selection resulted in Kern Steel being selected as the "Best Value" and most technically competent contractor.

The Tail dock is self propelled with a maximum speed of 3mph, 6 access levels, powered Deck Sliders, personnel Elevator and a Jib Hoist. The Tail Dock was designed to be driven and docked to a C-5 aircraft Tail in the Hangar or out on the ramp.

KSF AERO

Rocket / Erector Assembly / Access Towers

KSF designed & built two OSHA compliant 70ft tall rocket assembly/ access towers.

The tower's inboard edges contained powered adjustable/locking decks that could safely access the rocket high above the ground. Each tower had an X-Y adjustable rainbow access bridge to allow crown access.

The tower was equipped with two material lifts and a manually powered jacking system.

The tower was equipped with an air system, data system, electrical outlets & LED lighting.

The towers ride on casters and can be towed into place by a tugger or robotic mover. It also had the ability to be moved by overhead crane.

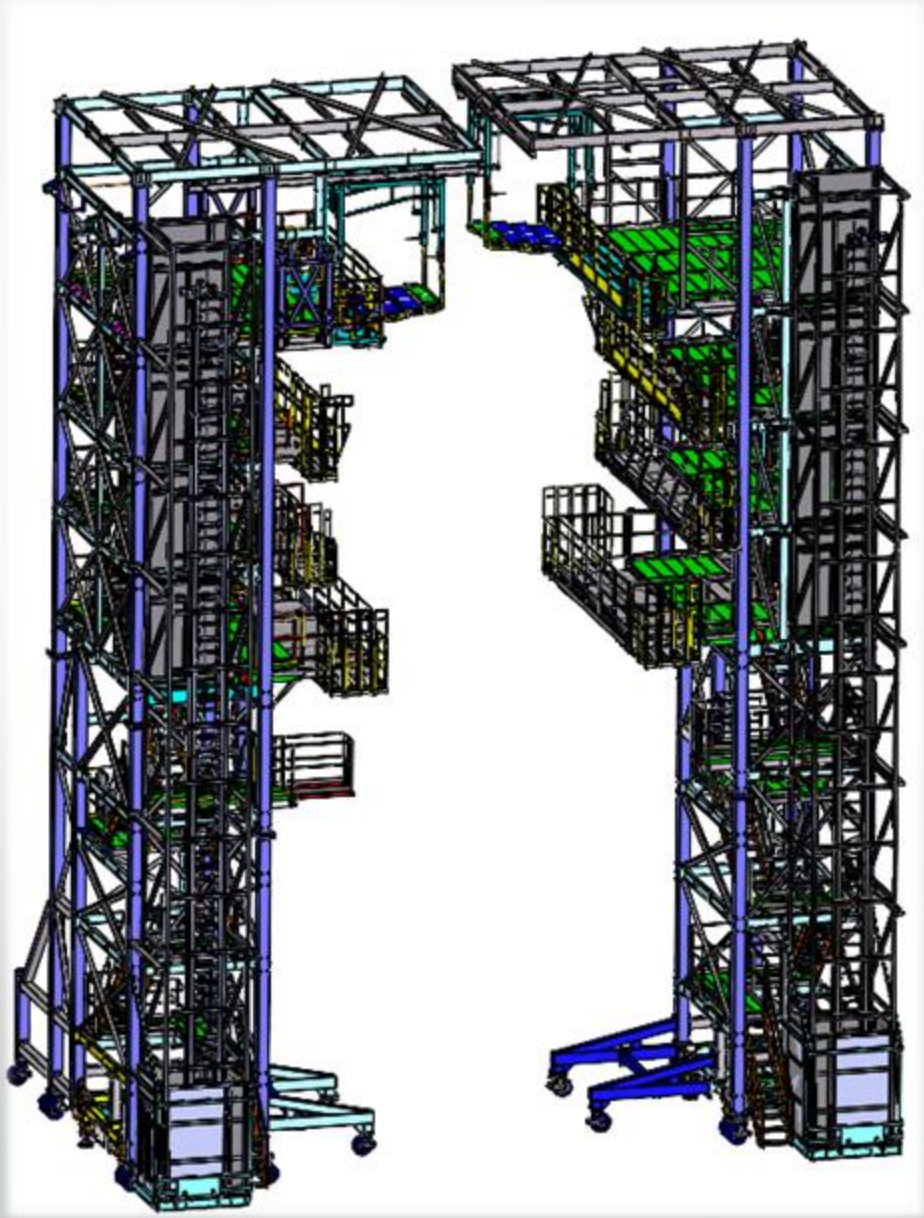

Rocket Assembly /Access Towers

KSF designed & built two OSHA compliant 50ft tall rocket assembly/ access towers.

The tower's inboard edges contained powered adjustable/locking decks that could safely access the rocket high above the ground. Each tower had an X-Y adjustable rainbow access bridge to allow crown access.

The tower was equipped with two material lifts and a manually powered jacking system.

The tower was equipped with an air system, data system, fiber optic test system, electrical outlets & LED lighting.

The tower rides on casters and can be towed into place by a tugger or robotic mover. It also had the ability to be moved by overhead crane.

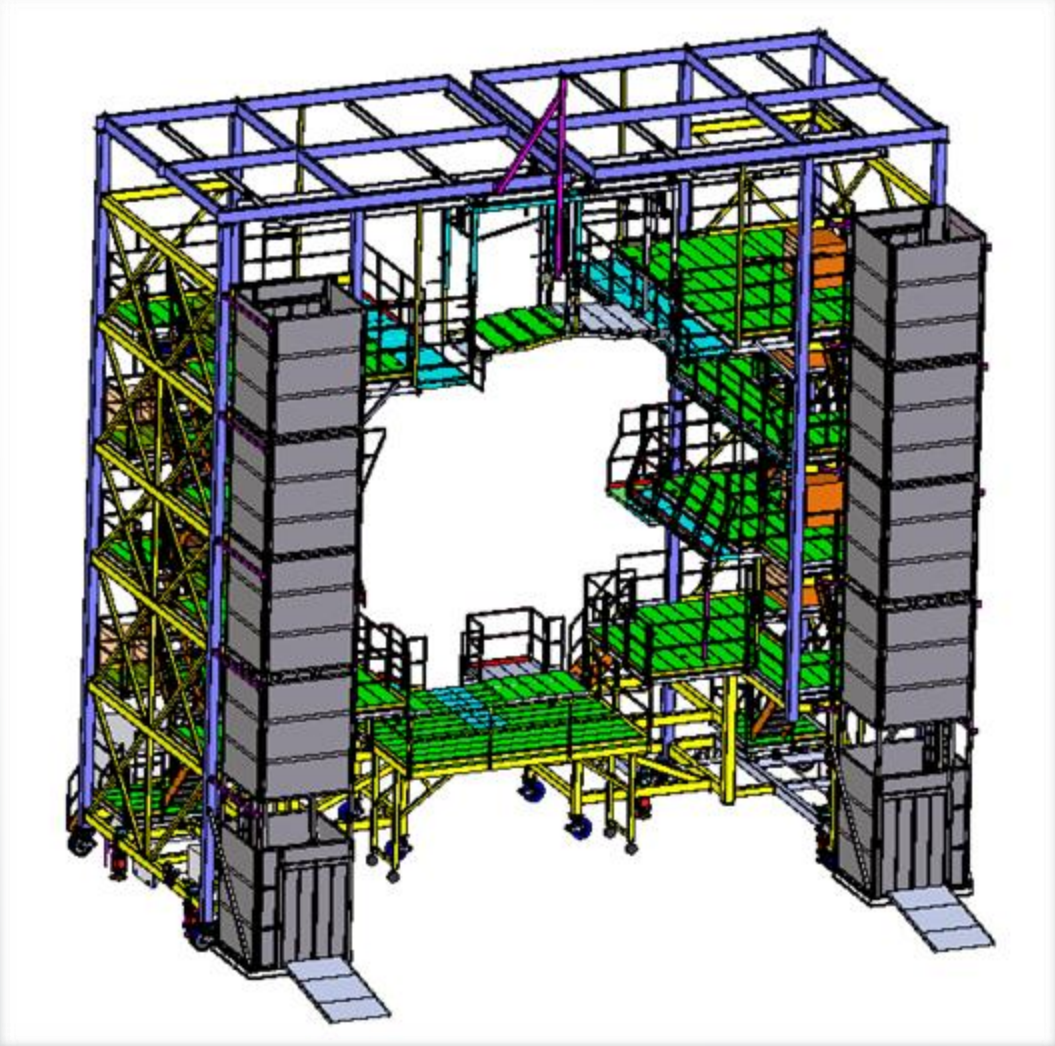

Rocket Engine Access Tower

KSF designed & built an OSHA compliant 27ft tall rocket engine access tower.

The tower's inboard edge contained powered adjustable/locking deck sliders that could safely access the rocket engine high above the ground.

The tower was equipped with two powered jib hoists used to lift materials and tools. KSF also designed and built three lightweight portable tool positioners used to test the rocket engines.

The tower was equipped with an air system, electrical outlets & LED lighting.

The tower rides on casters and can be towed into place by a tugger or robotic mover. It also had the ability to be moved by overhead crane.

Mobile Work Platforms

KSF designed & built over fifty OSHA compliant work platforms that were used to access specialized aerospace assemblies.

The platforms had a powered jacking system allowing them to jack up/down a total of 5ft. The platforms' inboard edge contained adjustable/locking deck sliders that could conform to the build article's contour.

The platforms were equipped with a self-contained HEPA vacuum system, air system, electrical outlets, data system, LED lighting, and projector masts.

The platforms could be towed by a tug and lifted with an overhead crane.

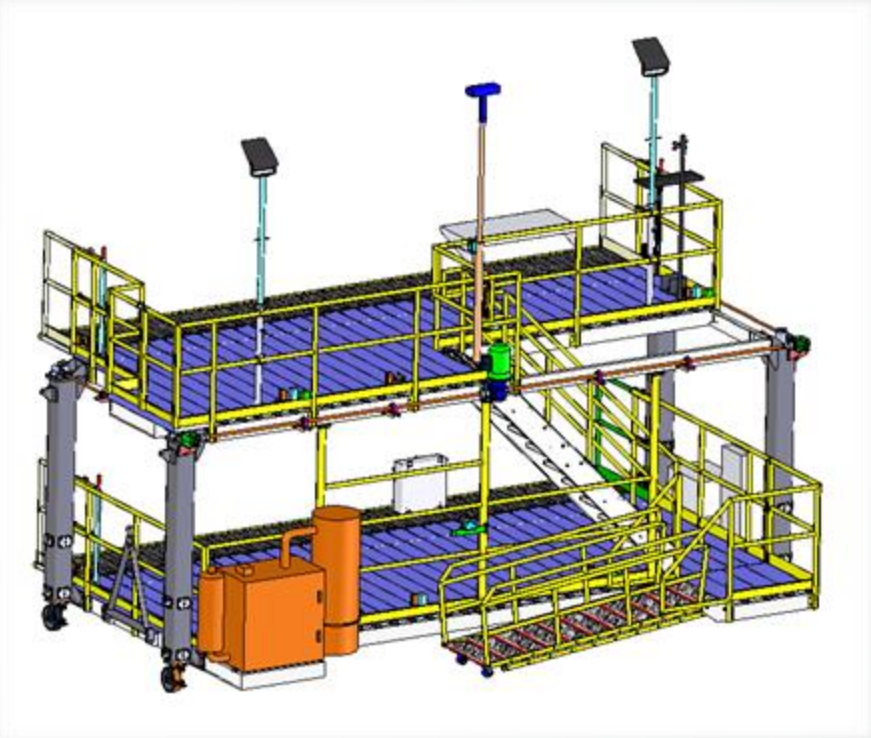

Assembly Work Platforms

KSF designed & built ten OSHA compliant work platforms that were used to access rocket build assemblies.

The platforms had a powered jacking system allowing them to jack up/down a total of 9ft. The platforms' inboard edge contained adjustable/locking deck sliders that could conform to the build article's contour.

The platforms contained a PLC controlled collision detection system that would prevent or stop the jacking to prevent damage to equipment in the event of an interference to the build article.

The platforms were equipped with an air system, electrical outlets & LED lighting.

The platforms ride on air casters and can be pushed into place by hand.

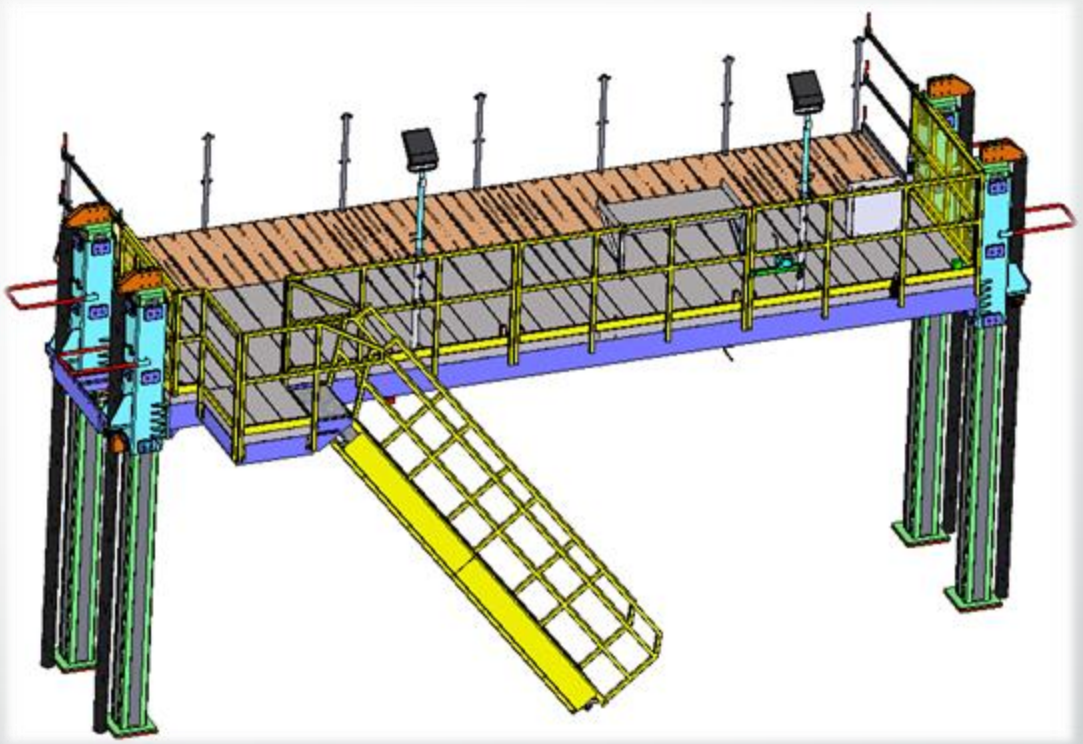

Rocket Underbelly Work Platform

KSF designed & built an OSHA compliant work platform that was used to access a rocket first stage underbelly.

The platform had an air powered jacking system allowing it to jack up/down a total of 4ft.

The platform could be towed by a tug and lifted with an overhead crane.

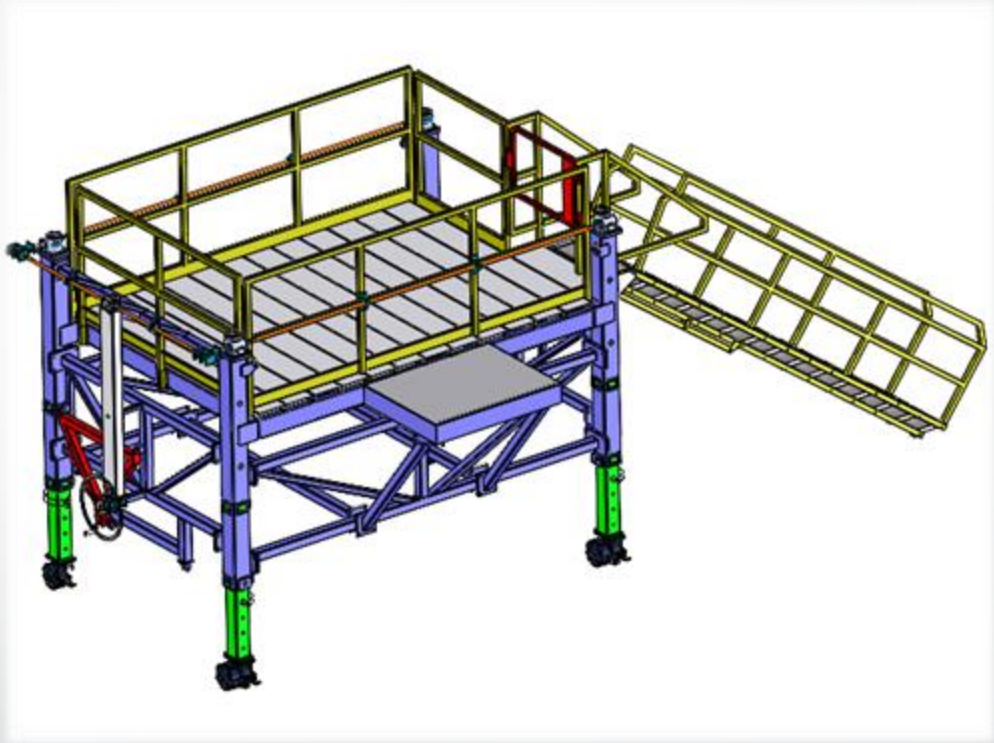

Test Fixture/Platform

KSF designed & built an OSHA compliant rocket fueling test fixture/work platform. The fixture supported a heavy high-load strongback used to test the rocket.

The platform had the ability to manually jack up and down to adjust the strongback relative to the rocket centerline.

The platform was designed to support multiple power and control modules that were used in the testing.

The platforms were equipped with an air system & electrical outlets.

The platform rode on air casters and could be pushed into place by hand. It also had the ability to be moved by overhead crane.

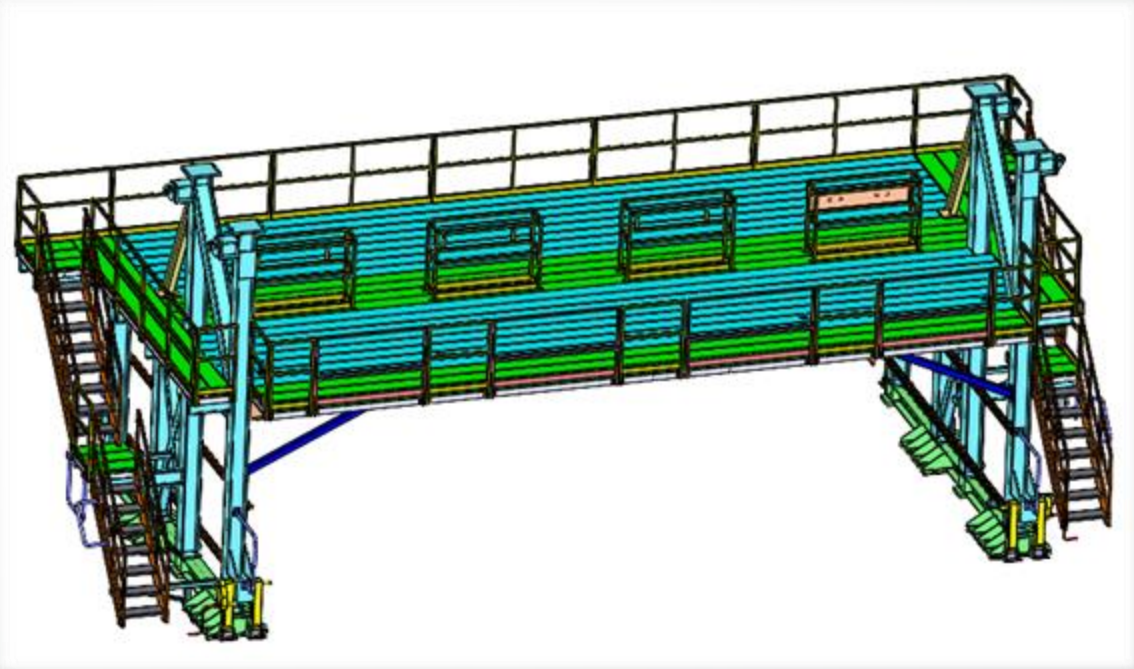

Lifting Box Spreader

KSF was tasked to design a mobile lifting spreader that was capable of lifting four different sized work platforms. Max lifting capacity was 13,100 lbs. The lifting spreader was fully mobile with four lockable casters and a tow hitch. The spreader was designed, fabricated, assembled and proof tested in-house.

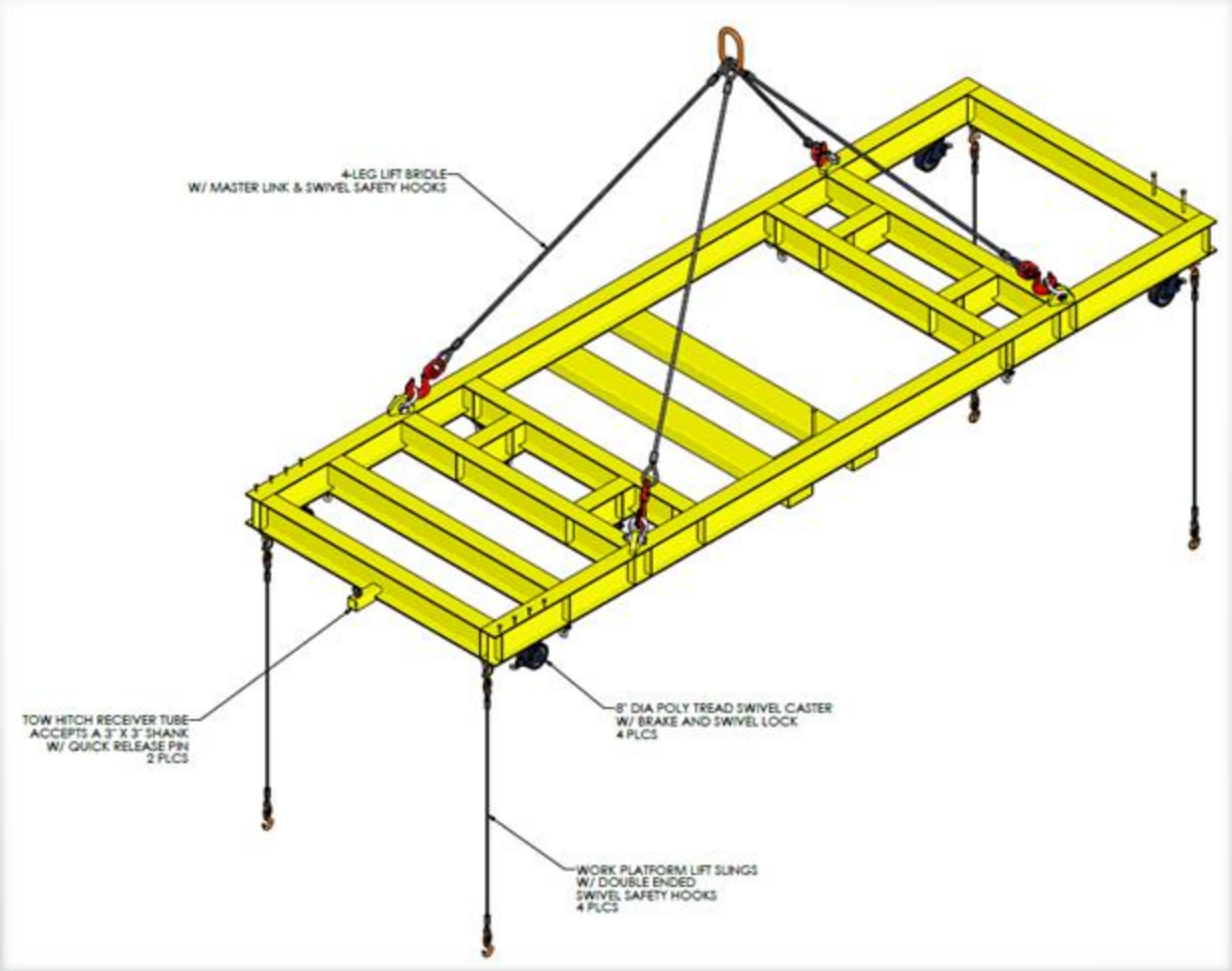

C-5 Iso Maintenance Stands

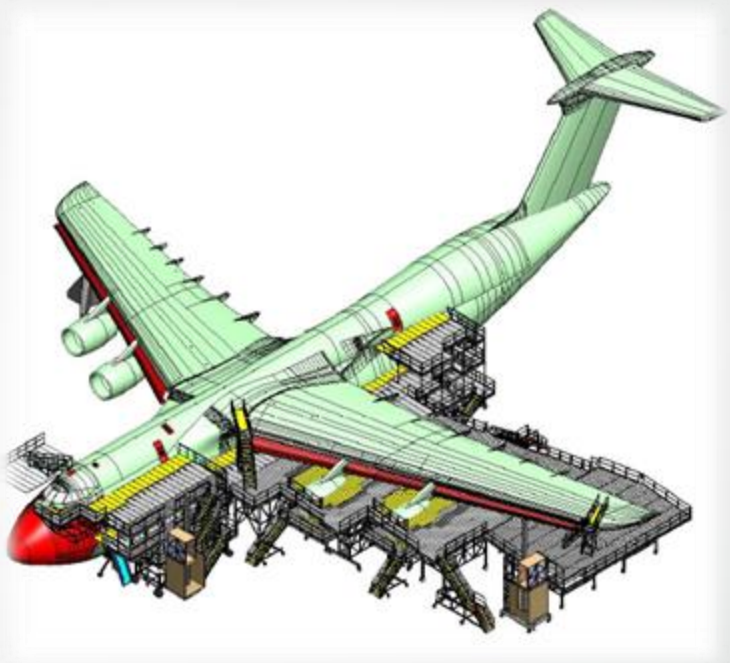

Kern Steel was selected for this project through the U.S. Air Force's rigorous "Full Four Color" source selection process. This selection resulted in Kern Steel being selected as the "Best Value" and most technically competent contractor.

The C-5 ISO system consists of Wing Docks, Engine Docks and Fuselage Docks. All the Docks have a powered vertical lift system capable of 7 feet (2.14M) of travel to accommodate a fully jacked aircraft. Each Dock section is equipped with powered Deck Sliders. The entire Dock system remains in place for aircraft docking & de-docking. Wing stand sections behind the Engines have the ability to drop down low enough to provide adequate clearance for the Engines during aircraft docking & de-docking.

KSF AERO

F-35 Assembly Line

KSF Aero has been heavily involved in the design and build of Lockheed's F-35 Assembly Line Platforms and Fixtures. These projects were designed, built and installed for Lockheed at their Fort Worth Plant.

These projects consisted of multi-level platforms with sliders, powered drawbridges, utility stations, material lifts, tool holding fixtures and specialized folding handrails.

Each platform was fully outfitted with power, air, data, lighting, beacons and fire protection.

C-130 Iso Maintenance Stands

The C-130 ISO system consists of Wing Stands, Tail Stand and Fuselage Stands that were built for the U.S. Air Force.

The Stand system consists of (28) individual light weight modules that are arranged about the aircraft to create a continuous working surface. The Air Force requirement was that each module be able to be moved by (2) people and deployed around the aircraft in one hour. Each Stand module is a equipped with a manually operated vertical lift system capable of 2 feet (610mm) of travel to accommodate a fully jacked aircraft.

KSF up to this point has delivered (15) of the Stand systems to U.S. Air Force bases around the world.

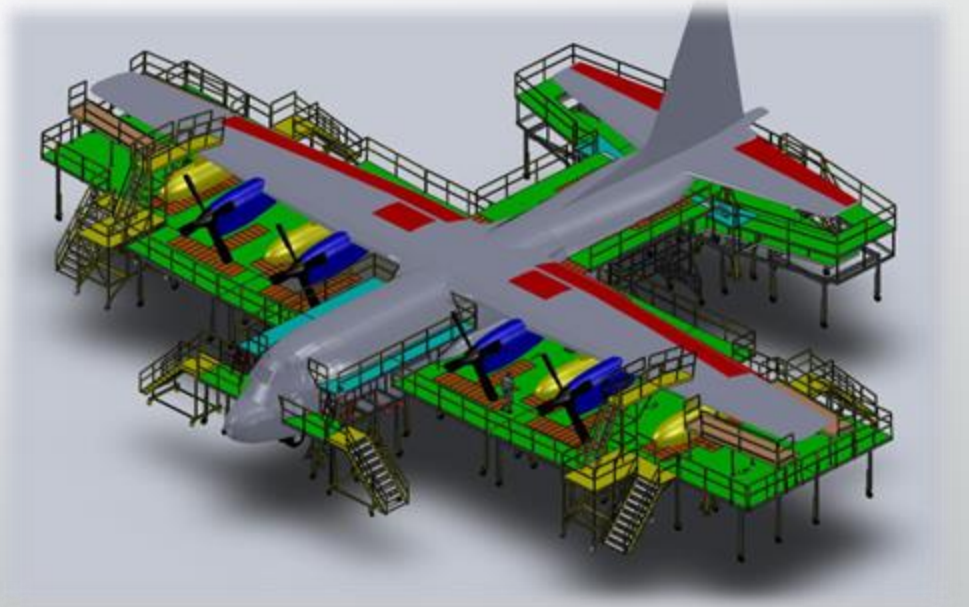

KSF AERO

Lockheed F-35 Assembly Line

KSF has been heavily involved in the design and build of Lockheed's F-35 Assembly Line Platforms and Fixtures. These projects were designed, built and installed for Lockheed at their Fort Worth Plant.

These projects consisted of multi-level platforms with sliders, powered drawbridges, utility stations, material lifts, tool holding fixtures and specialized folding handrails.

Each platform was fully outfitted with power, air, data, lighting, beacons and fire protection.

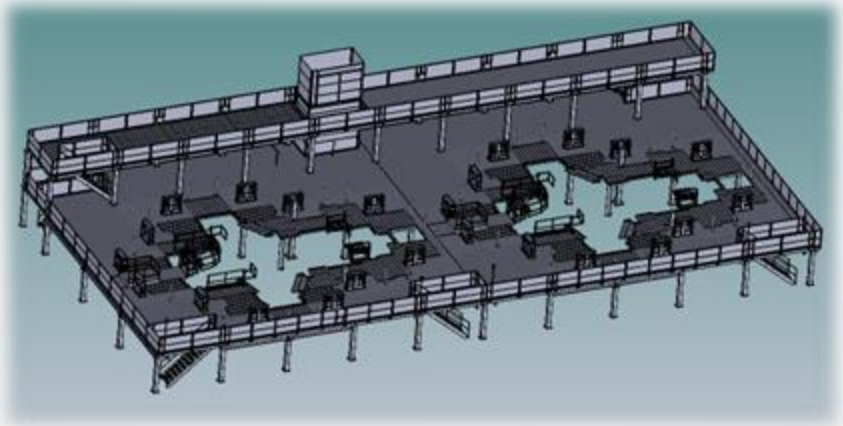

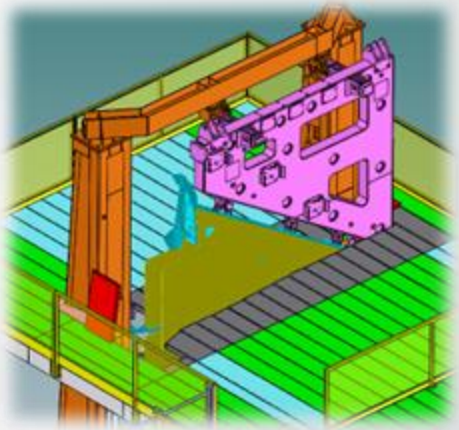

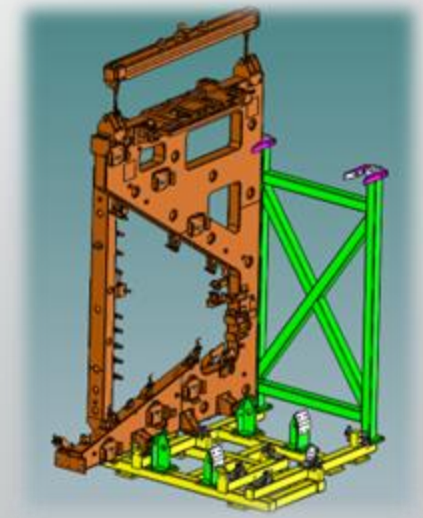

KSF AERO

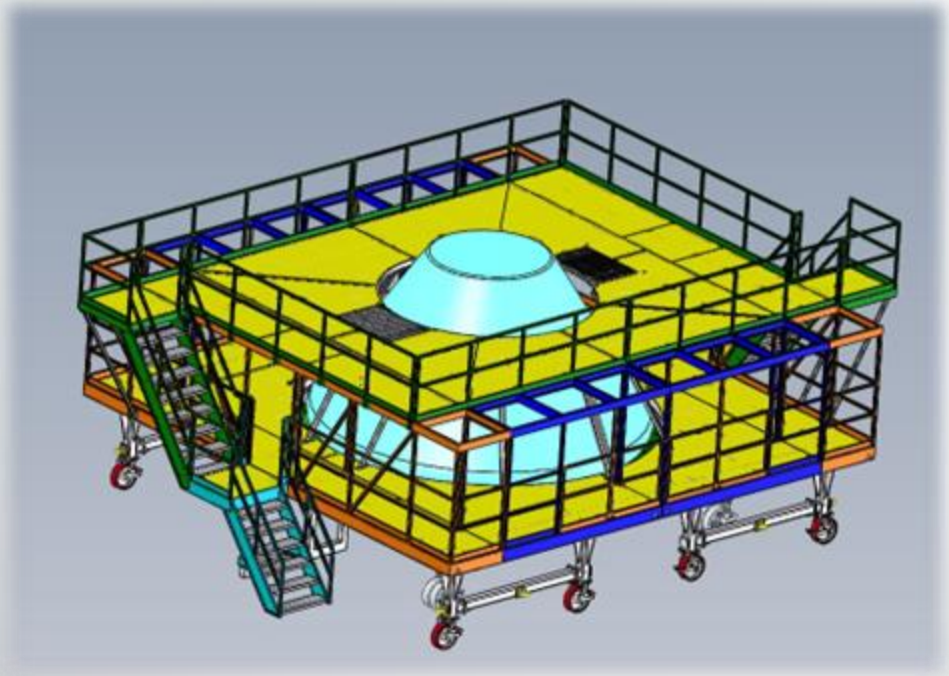

NASA Orion Flight
Abort Test Platform

NASA/Ames Tilt
Rotor Test Fixture

KSF AERO

B747/777 Wing, Fuselage & Tail Dock

This Dock system consists of a Wing Dock and an integrated Fuselage/Tail Dock to provide heavy maintenance access to the B747 & B777 aircraft.

The Fuselage/Tail Dock is comprised of (2) halves that swing open for aircraft docking & de-docking. The Wing Dock is equipped with "Bomb Bay" type deck sections that swing down for aircraft engine clearance when docking & de-docking the aircraft.

KSF AERO

B747/777 Over Wing Fall Protection System

This Over Wing Fall Protection system was designed, built and installed for United Airlines at their San Francisco, California, Maintenance Base.

It consists of (2) overhead Trusses that provides fall protection for (3) workers on each Wing.

Each over Wing support Truss pivots in turn changing its angle to accommodate the different Wing sweeps of the B747 & B777 aircraft.

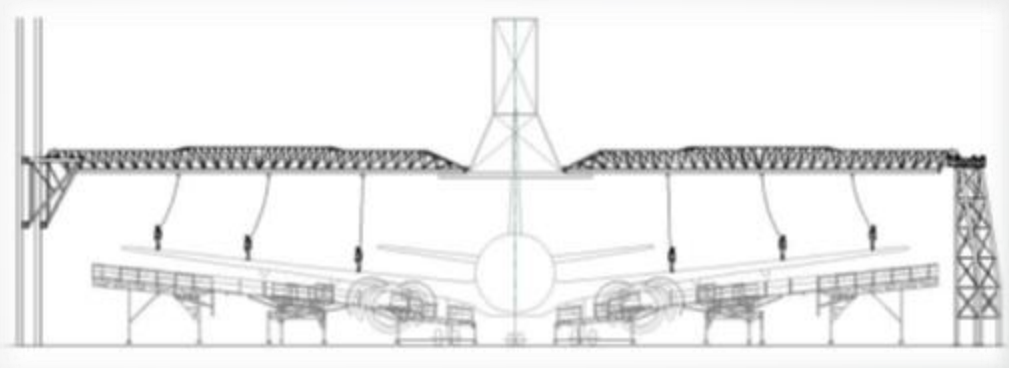

KSF AERO

Structural Projects

KSF

Kern Steel Fabrication, Inc

Disneyland - Star Wars Scene 18

Coffer Dam

Prototype Solar Canopy

DOD Navy Submarine Towers

DOD Army Container Fuel System

Shop Capabilities

KSF

Kern Steel Fabrication, Inc

Fabrication Bay #1

Fabrication Bay #2

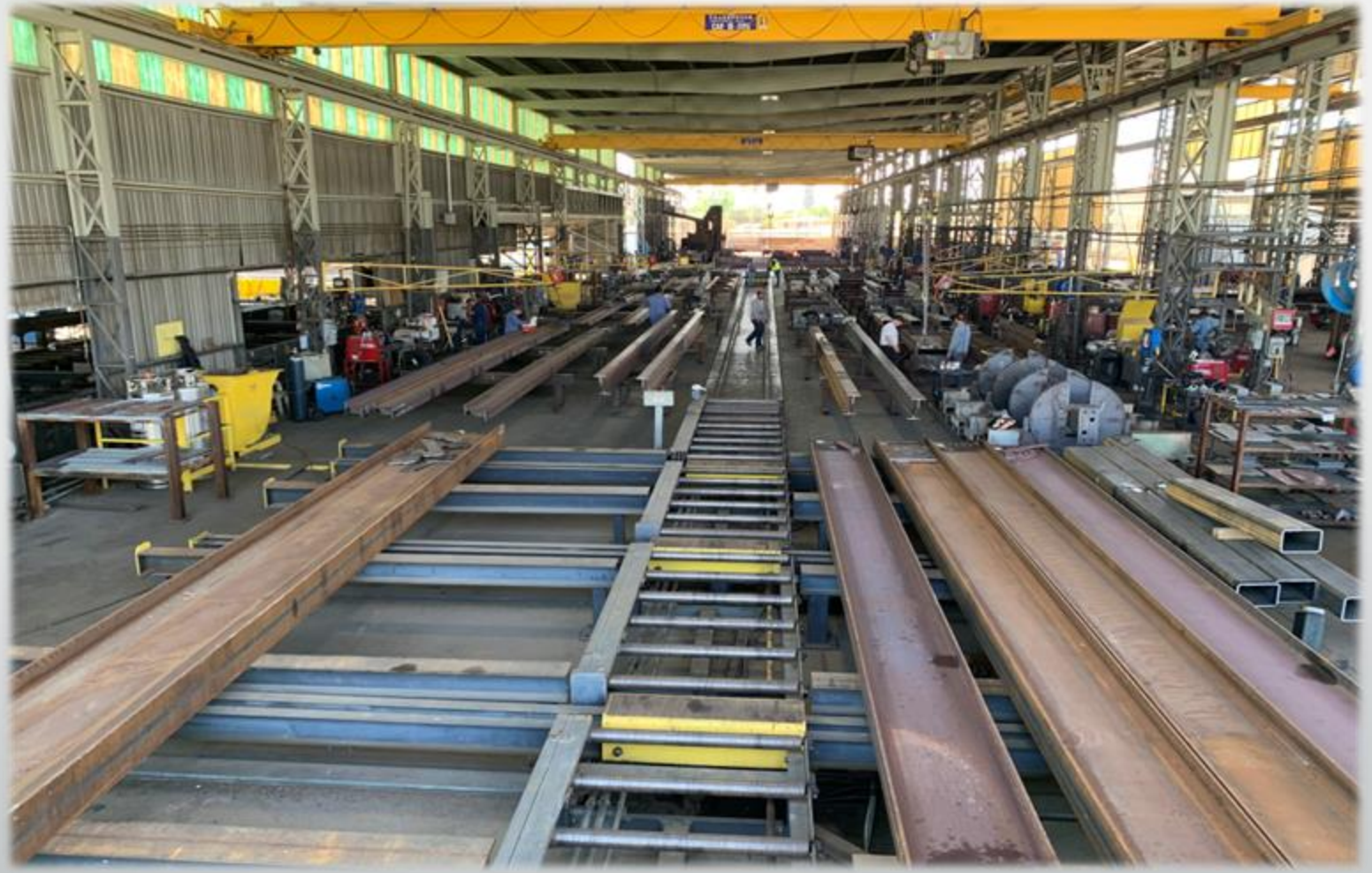

Fabrication Bay #3

Large Robotic Welder

Small Robotic Welder

Plate Laser Cutting Machine

Programable Press Brake

Tube Laser Cutter

BLM GROUP LT8 LASER TUBE CUTTING MACHINE

- Integrates with 3D CAD / CAM Software
- Cuts Tube up to 8" x 8" x .500 Wall
- Reduces Design & Prototyping time
- Minimizes time to market

Blast & Paint Line

ABRASIVE BLASTING FACILITY

•Self contained and completely enclosed

•20' W x 16' H x 50' L

•Abrasive reclaim floor collects the used abrasives

•Utilizes steel shot abrasive

•Dust collector keeps the environment clean and contaminant free

•Protects the environment by recycling blast abrasives

PAINT BOOTH

•20' W x 16' H x 120' L

•Self contained and completely enclosed

•Meets all EPA requirements

•XtremeMix Proportioning System

•100% solids pump

•Forced air curing and climate control up to 180°F

•Meets all EPA requirements

Paint Booth

Automated Blast Machine

Powder Coat Booth

Large Industrial Oven

Proud to Serve

LOCKHEED MARTIN

NASA

UNITED STATES NAVY

NORTHROP GRUMMAN

U.S.ARMY

U.S. AIR FORCE

American Airlines

UNITED

BLUE ORIGIN

Drill Cool SYSTEMS, INC

Contact Us

President: Ali Champness

ali@kernsteel.com

Ph: 661-912-0530

Kern Steel Fabrication, Inc.

www.ksfaero.com

www.kernsteel.com

Phone: 661-327-9588

Fax: 661-327-5890

Address: 627 Williams St

Bakersfield, CA 93305

KSF AERO

A Division of Kern Steel Fabrication

The Leaders in Specialized Work Platforms

Cage Code #31AY6

KSF

Kern Steel Fabrication, Inc